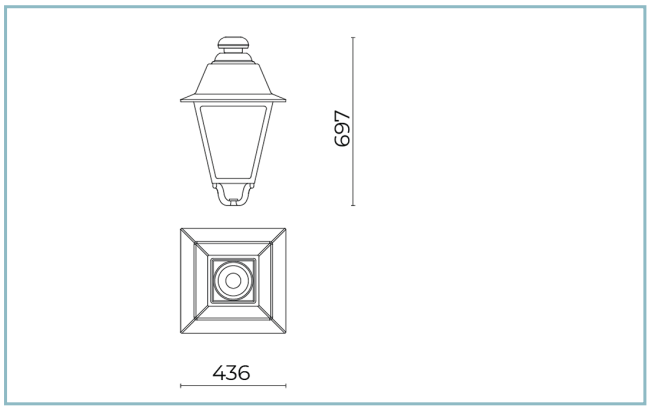


## General Features

| |
|---|
| Description: lantern designed to house the LED technology |
| Insulation class: class II |
| Rated voltage: 220-240 V 50 Hz |
| Protection Grade: IP66 |
| Impact protection: IK08 |
| Surge protection device: integrated 10kV-10kA, Type 3, equipped with LED signaling and thermofusible for disconnection at the end of life; impulse withstand CL II 10kV DM |
| Power Factor: > 0.90 |
| Ambient temperature Ta: -30°C +50°C |
| Weight: 8.00 kg |
| Max exposed surface: 0,19 m² |
| Lateral exposed surface: 0,09 m² |
| Common mode surge protection: 10 kV |
| Overvoltage protection differential mode: 10 kV |
| Driver: included |
| Driver lifetime: >100.000 h @ Ta 25°C (0,2% / 1000h) |
| Marks and Certifications: ENEC / CE |

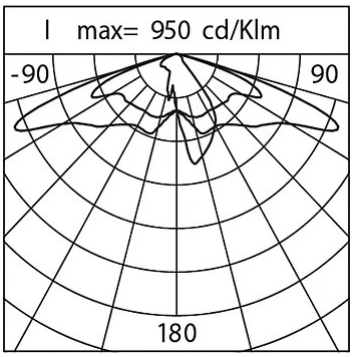


**Performance Data***

| | |
|---|---|
| Source flux: | 2040 lm |
| Source power: | 9 W |
| Source efficiency: | 226 lm/W |
| Device flux: | 1630 lm |
| Device power: | 12 W |
| Appliance efficiency: | 135 lm/W |
| Glare Index Category: | D6 |

| **Optical System** |
|---|
| Source: LED R1 |
| Color Temperature: 4000 K |
| Color Rendering Index (CRI): ≥ 70 |
| Chromatic consistency (SDCM): ≤ 3 |
| Type of optics: LT-C1 Cycle path |
| Optical group life: >100.000 h @ Ta 25°C L90B10 |
| Photobiological safety class: EXEMPT GROUP |
| ULOR: 0% |
| DLOR: 100% |
| Light intensity category: G*3 |
| **Normative References** |
| EN60598-1 / EN60598-2-3 / EN62471 / EN61547 |

| **Installation and maintenance** |
|---|
| Installation: post top |
| Pole diameter: 3/4 |
| Fixing: post top - standard with 3/4" male gas attachment; on Ø 60 mm poles using the required accessory (code 01AG901C0); on poles with a 3/4" female gas attachment using the required accessory (code 01AG900C0); arm mounted - standard with 3/4" male gas attachment; on arms with a 3/4" female gas attachment using the required accessory (code 01AG900C0); on Ø 60 mm arms using the required accessory (code 01AG902C0). |
| Ø power cable: 10 ÷ 14 mm |
| Cable Gland: PG16 |
| Replaceable wiring plate: removable plate |
| Replaceable optical unit: each LED module is replaceable |
| Disconnector: automatic (with terminal section 2.5 $mm^2$) |
| Power supply compartment: independent from the optical system |

| **Flow adjustment** | On request |
|---|---|
| Virtual Midnight Teaching | X |
| Constant flow output (CLO) | X |
| DALI control | X |
| Power line telemanagement (PLC) | X |
| Wireless remote management | X |

| **Materials** |
|---|
| Body: die-cast aluminium alloy UNI EN AB 47100 (copper content < 1%) |
| Screen: extra clear tempered flat glass 4 mm |
| Lenses: high-transparency PMMA |
| Fixing system: die-cast aluminium alloy UNI EN AB 47100 (copper content < 1%) |
| Seals: expanded anti-age silicone foam |
| Screws: stainless steel AISI 304 |
| Wiring plate: zinc-plated steel |
| Finish: phospho-chromatation treated and polyester powder-coated in 16 phases to increase weather resistance |

| **Colors** | |
|---|---|
| ■ Sablé 100 Noir | Code: **01AG1B221027CHM4** |

## Complements

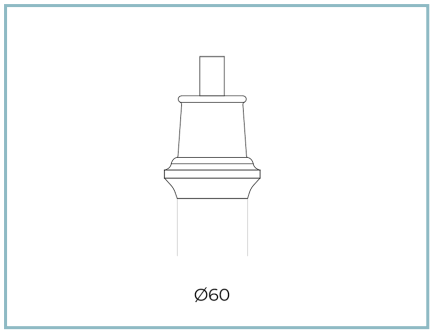


01AG901C0

Fastening kit post top
Ø 60 mm H 90 mm. Colour: Sablé 100 Noir.

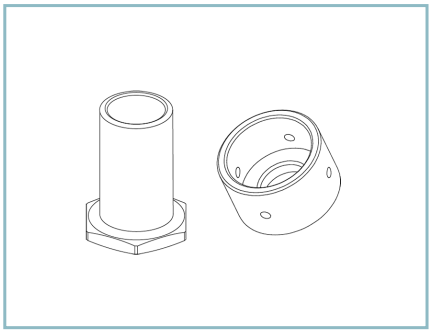

01AG902C0

Fastening adapter 3/4" gas
for arms UP & DOWN Ø 60 mm.

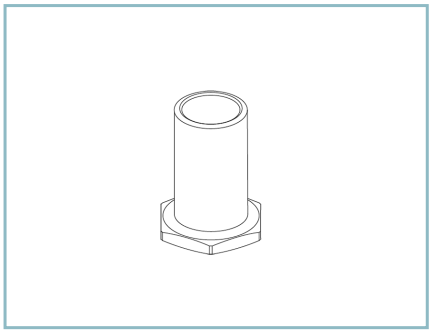

01AG900C0

Fastening kit on poles / arms UP
with female 3/4" gas.

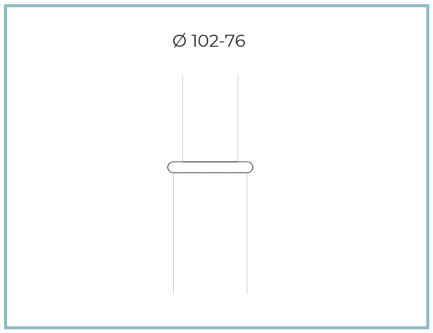


01AK970C0

Collar for pole
Ø 102/76 mm. Colour: Sablé 100 Noir.

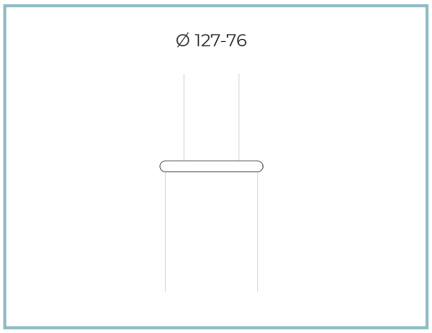


01AK971C0

Collar for pole
Ø 127/76 mm. Colour: Sablé 100 Noir.

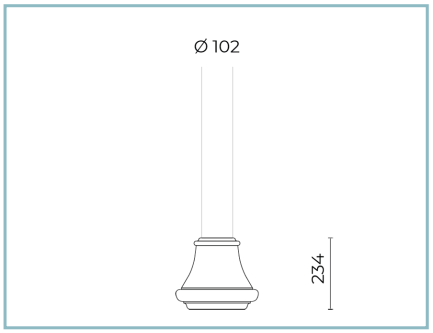


01AK972C0

Low base
for poles Ø 102 mm. Colour: Sablé 100 Noir.

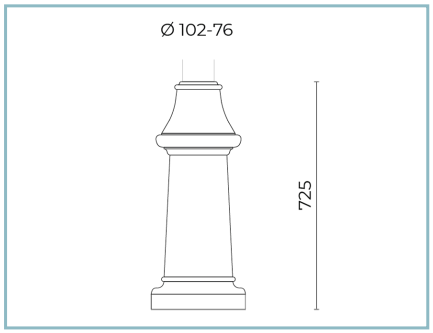


01AK973C0

High base
for poles Ø 102/76 mm. Colour: Sablé 100 Noir.

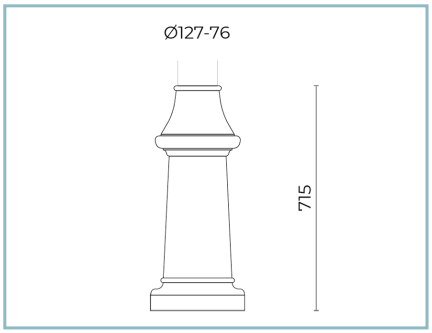


01AK974C0

High base
for poles Ø 127mm. Colour: Sablé 100 Noir.

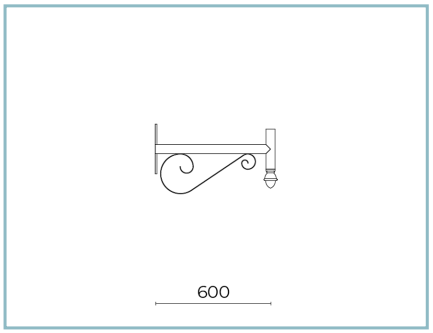


01AG924C0

B64-P Wall-mounted arm
UP L=600 mm. Colour: Sablé 100 Noir.

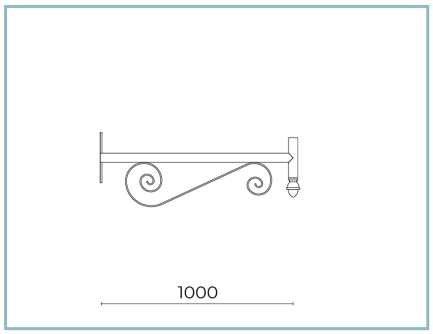


01AG925C0

B65-P Wall-mounted arm
UP L=1000 mm. Colour: Sablé 100 Noir.

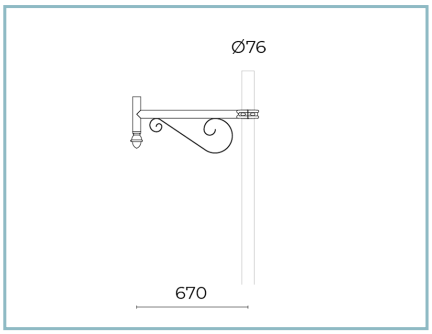


01AG914C0

B64 Single arm UP
for tapered poles Ø 127/76 mm. L=600 mm. Colour: Sablé 100 Noir.

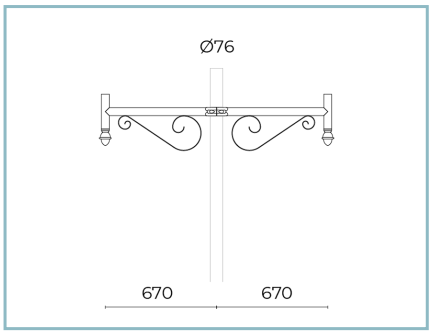


01AG918C0

B68 Double arm UP
for tapered poles Ø 127/76 mm. L=600 mm. Colour: Sablé 100 Noir.

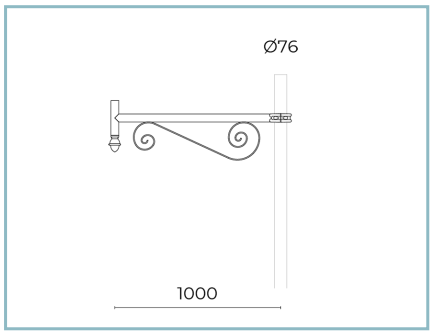


01AG915C0

B65 Single arm UP
for tapered poles Ø 127/76 mm. L=1000 mm. Colour: Sablé 100 Noir.

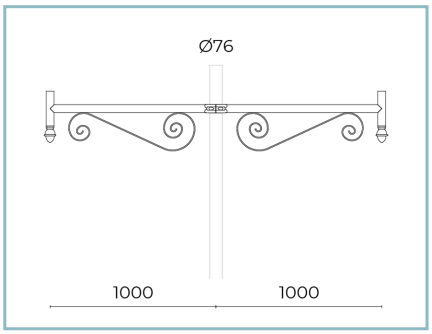


01AG919C0

B69 Double arm UP
for tapered poles Ø 127/76 mm. L=1000 mm. Colour: Sablé 100 Noir.

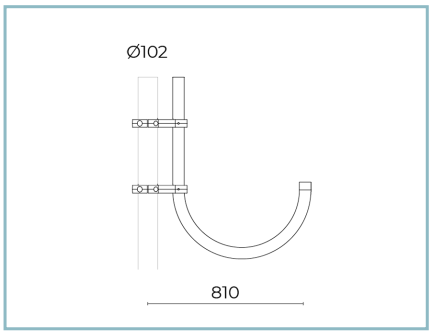


01AG910C0

B60 Single curved arm UP
for cylindrical poles Ø 102 mm. L=810 mm. Colour: Sablé 100 Noir.

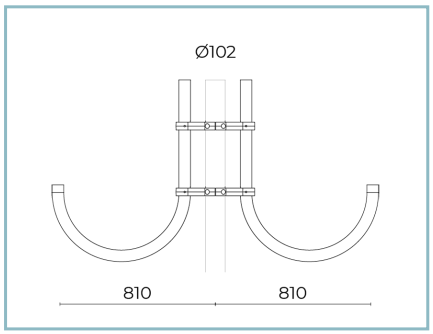


01AG911C0

B61 Double curved arm UP
for cylindrical poles Ø 102 mm. L=810 mm. Colour: Sablé 100 Noir.

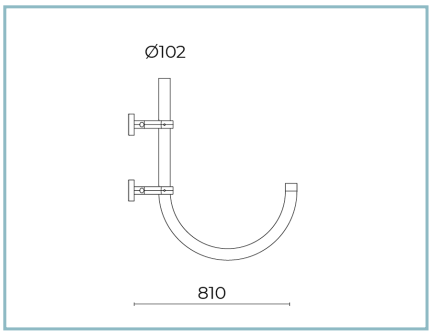


01AG922C0

B60-P Curved wall-mounted arm
UP L=810 mm. Colour: Sablé 100 Noir.

NOTES
*Performance data
The values indicated in this data sheet are nominal values with a tolerance of +/-7%.
Source flux and source efficiency data refer to the LED module without optics; in case you are interested in the performance of the LED module complete with optical system, you must multiply the data reported by the factor 0.9.

General Data
The characteristics of the product listed may be subject to change and must be confirmed when ordering.
In order to promote constant updating of its products, Cariboni Group reserves the right to make changes without prior notice.