Product Sheet
16/05/2022

Koinè Pole System
Size: small
Colour Temperature: 3000 K
Type of optics: street asymmetrical LA-03

01KO1C466917AHL5
Colour: Grey RAL9006

General Features

Description: LED street fixture
Insulation class: class II
Rated voltage: 220-240 V 50/60 Hz
Protection Grade: IP66
Impact protection: IK09
Surge protection device: integrated 10kV-10kA
Power Factor: > 0.9
Ambient temperature Ta: -30°C +50°C
Weight: 4.2 kg
Max exposed surface: 0.11 m²
Lateral exposed surface: 0.035 m²
Common mode surge protection: 10 kV
Overvoltage protection differential mode: 10 kV
Driver: included
Driver lifetime: >100.000h @Ta25°C
Marks and Certifications: ENEC / CE

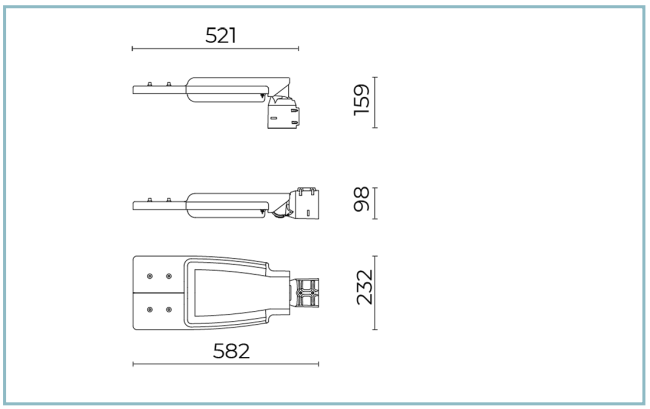

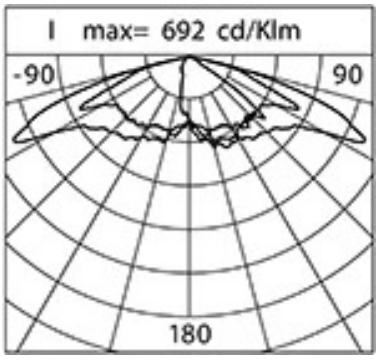

Performance Data*

Source flow:	11135 lm
Source power:	61 W
Source efficiency:	183 lm/W
Fitting flux:	9575 lm
Fitting power:	65 W
Fitting efficiency:	147 lm/W
Glare Index Category:	D4

Cariboni group

Optical System
Source: LED R2
Colour Temperature: 3000 K
Color Rendering Index (CRI): ≥ 70
Chromatic consistency (SDCM): ≤ 3
Type of optics: street asymmetrical LA-03
Optical group life: >100.000h @Ta25°C L90B10
Photobiological safety class: EXEMPT GROUP
ULOR: 0%
DLOR: 100%
Light intensity category: G*3
Normative References
EN60598-1, EN60598-2-3, EN61547; EN62471, EN55015, EN61000-3-2, EN61000-3-3

Installation and maintenance
Installation: side pole / arm
Pole diameter: Ø 46 - 60 - 76 mm
Tilt: post top 0 +90° (step 5°); arm 0 -90° (step 5°)
Ø power cable: 10 ÷ 14 mm
Cable Gland: PG16
Power supply compartment: independent from the optical group

Flux regulation	Standard	On request
Virtual Midnight Teaching	X	
Arrangement for Zhaga connector (Book 18)	X	
Constant flow output (CLO)		X
Adjusting 1-10V		X
DALI control		X
Mains voltage variation		X
Pilot line		X
Wireless remote management		X
Arrangement for motion / brightness sensors		X

Materials
Body: die-cast aluminium alloy UNI EN AB 47100 (copper content < 1%)
Screen: tempered flat glass 4 mm
Lenses: high-transparency PMMA
Fitting system: die-cast aluminium alloy UNI EN AB 47100 (copper content < 1%)
Seals: anti-age silicone
Screws: stainless steel AISI 304
Finish: phospho-chromatation treated and polyester powder-coated in 16 phases to increase weather resistance

Colours	
Grey RAL9006	Code: **01KO1C466917AHL5**

Complements

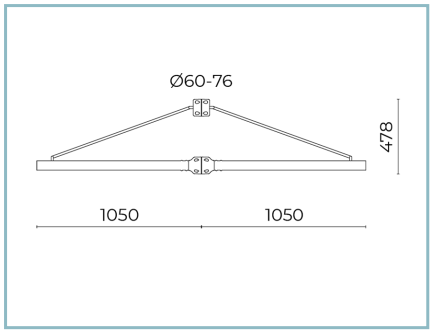

01AK968A0

B59 Double tubular arm
Ø 60 mm with tensioning rod for poles Ø 60-76 mm. L=1050 mm (pole center-fitting center). Colour: grey RAL9006.

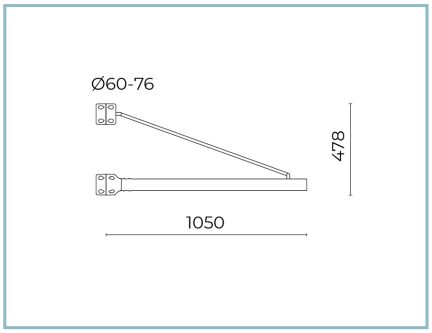

01AK969A0

B74 Single tubular arm
Ø 60 mm with tensioning rod for poles Ø 60-76 mm. L=1050 mm (pole center-fitting center). Colour: grey RAL9006.

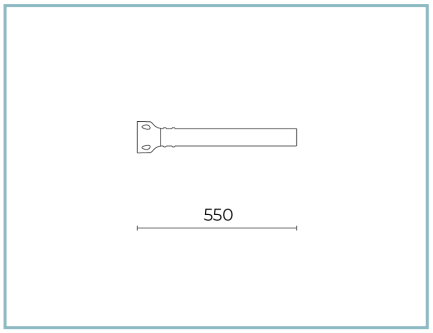

01AK951A0

B1-P Tubular wall-mounted arm
Ø 60 mm. L=550 mm. Colour: grey RAL9006.

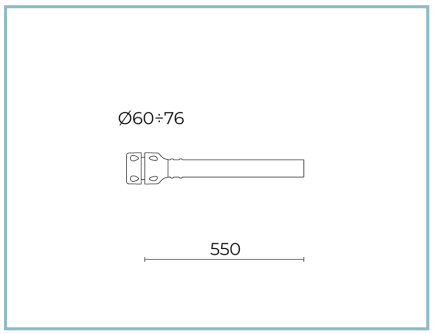

01AK921A0

B1 Double tubular arm
Ø 60 mm for poles Ø 60-76 mm. L=550 mm. Colour: grey RAL9006.

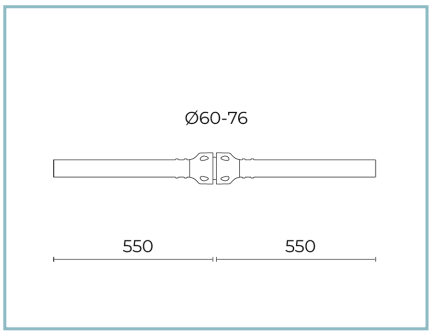

01AK922A0

B2 Double tubular arm
Ø 60 mm for poles Ø 60-76 mm. L=550 mm. Colour: grey RAL9006.

NOTES
*Performance data
The values indicated in this data sheet are nominal values with a tolerance of +/-7%.
Source flux and source efficiency data refer to the LED module without optics; in case you are interested in the performance of the LED module complete with optical system, you must multiply the data reported by the factor 0.9.

General Data
The characteristics of the product listed may be subject to change and must be confirmed when ordering.
In order to promote constant updating of its products, Cariboni Group reserves the right to make changes without prior notice.