Product Sheet
Rev. 28/06/2024

Kosmos Pole Side
Size: medium
Color Temperature: 4000 K
Type of optics: LT-64 Asymmetric beam with backlight

06KS2B260025CHM4
Colour: Sablé 100 Noir

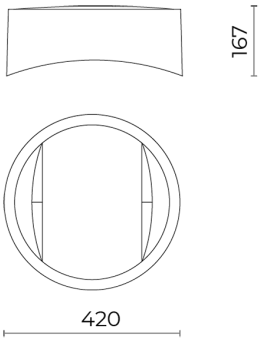

General Features

Description: LED luminaire
Insulation class: class II
Rated voltage: 220-240 V 50/60 Hz
Protection Grade: IP66
Impact protection: IK09
Surge protection device: integrated 10kV-10kA, Type 3, equipped with LED signaling and thermofusible for disconnection at the end of life; impulse withstand CL II 10kV DM
Power Factor: > 0.90
Ambient temperature Ta: -30°C +50°C
Weight: 7.50 kg
Max exposed surface: 0,140 m²
Lateral exposed surface: 0,063 m²
Common mode surge protection: 10 kV
Overvoltage protection differential mode: 10 kV
Driver: included
Driver lifetime: >100.000 h @ Ta 25°C (0,2% / 1000h)
Marks and Certifications: ENEC / CE

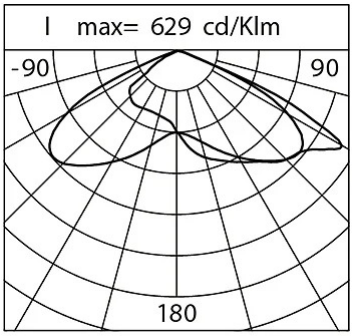

Performance Data*

Source flux:	5465 lm
Source power:	27.5 W
Source efficiency:	198 lm/W
Device flux:	4700 lm
Device power:	31 W
Appliance efficiency:	151 lm/W
Glare Index Category:	D5

Cariboni group

Optical System
Source: LED R1
Color Temperature: 4000 K
Color Rendering Index (CRI): ≥ 70
Chromatic consistency (SDCM): ≤ 3
Type of optics: LT-64 Asymmetric beam with backlight
Optical group life: >100.000 h @ Ta 25°C L90B10
Photobiological safety class: EXEMPT GROUP
ULOR: 0%
DLOR: 100%
Light intensity category: G*4
BUG rating: B1-U0-G1
Normative References
EN60598-1 / EN60598-2-3 / EN62471 / EN61547

Installation and maintenance
Installation: post top / side pole / arm
Pole diameter: Ø 60 - 76 - 102 mm
Tilt: (pole side) continuous / stepped adjustment -10° +190° (step 5°)
Fixing: upwards installation on a pole arm (for poles Ø 60-76 mm or poles Ø 102 mm) with adjustable joint made of die-cast aluminium alloy UNI EN AB 47100 (copper content < 1%), polyester powder coated (Sablé 100 Noir); L-shaped joint made of die-cast aluminium alloy UNI EN AB 47100 (copper content < 1%), polyester powder coated (Sablé 100 Noir), pole Ø 76 mm, with post-top reduction Ø 60 mm H. Ø 90 mm.
Wiring: pre-wired product
Ø power cable: 10 ÷ 14 mm
Cable Gland: PG16
Replaceable wiring plate: removable plate
Replaceable optical unit: LED disc replacement
Power supply compartment: independent from the optical system

Flow adjustment	On request
Virtual Midnight Teaching	X
Constant flow output (CLO)	X
DALI control	X
Mains voltage variation	X
Power line telemanagement (PLC)	X
Wireless remote management	X

Materials
Body: die-cast aluminium alloy UNI EN AB 47100 (copper content < 1%)
Screen: tempered flat glass
Lenses: high-transparency PMMA
Fixing system: die-cast aluminium alloy UNI EN AB 47100 (copper content < 1%)
Seals: expanded anti-age silicone foam
Screws: stainless steel AISI 304
Wiring plate: zinc-plated steel
Finish: phospho-chromatation treated and polyester powder-coated in 16 phases to increase weather resistance

Colors	
■ Sablé 100 Noir	Code: **06KS2B260025CHM4**

Complements

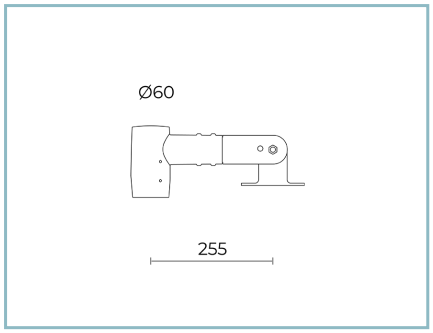

06KS906C0

B86 Joint for post top
Ø 60 mm. Colour: Sablé 100 Noir.

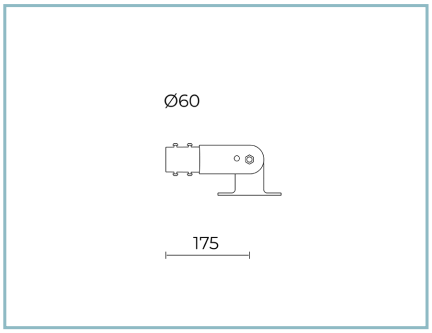

06KS904C0

B84 Joint for Ø 60 mm arms.
Colour: Sablé 100 Noir.

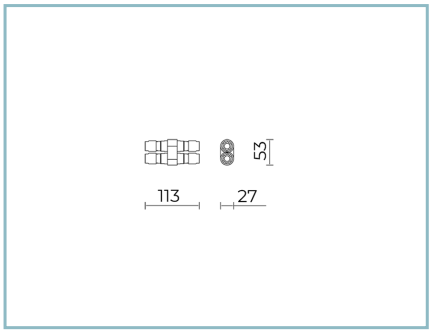

06KS909C0

B89 Connector 4 way IP68

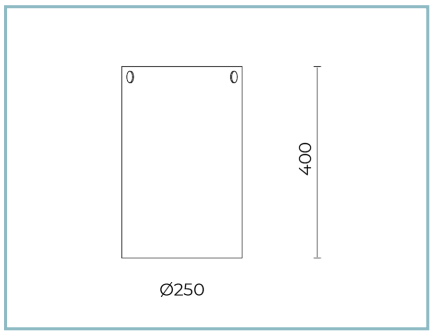

06ND901Y0

Diffuser
made of transparent polycarbonate

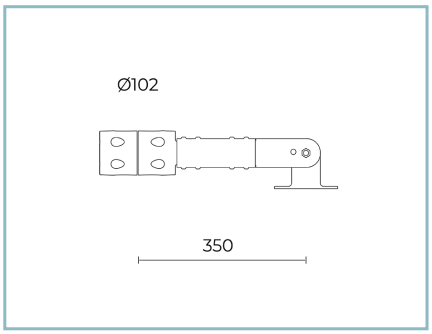

06KS912C0

B92 Single arm
for poles Ø 102 mm. L=350 mm. Colour: Sablé 100 Noir.

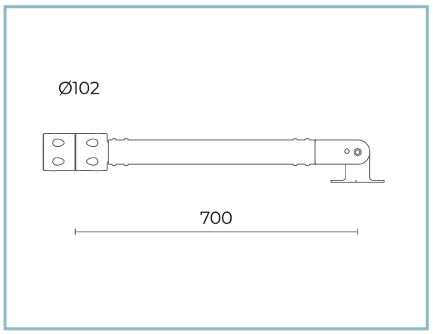

06KS913C0

B93 Single arm
for poles Ø 102 mm. L=700 mm.
Colour: Sablé 100 Noir.

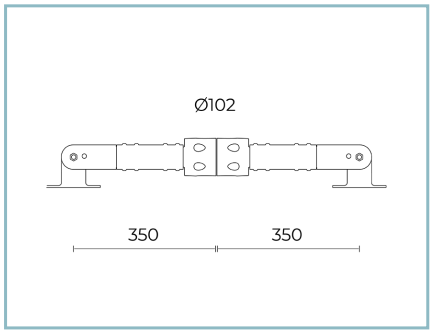

06KS914C0

B94 Double arm
for poles Ø 102 mm. L=350 mm. Colour: Sablé 100 Noir.

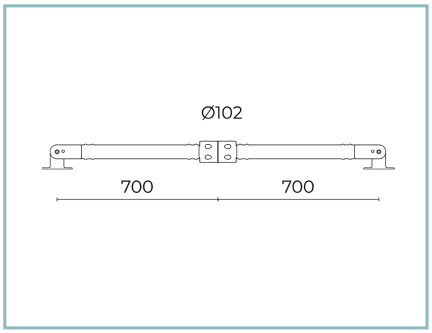

06KS915C0

B95 Double arm
for poles Ø 102 mm. L=700 mm.
Colour: Sablé 100 Noir.

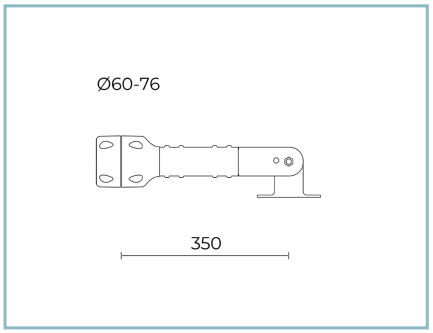

06KS907C0

B87 Single arm
for poles Ø 60-76 mm. L=350 mm.
Colour: Sablé 100 Noir.

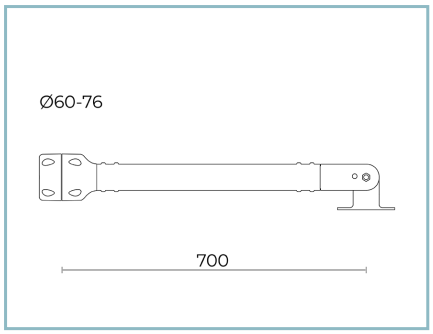

06KS908C0

B88 Single arm
for poles Ø 60-76 mm. L=700 mm.
Colour: Sablé 100 Noir.

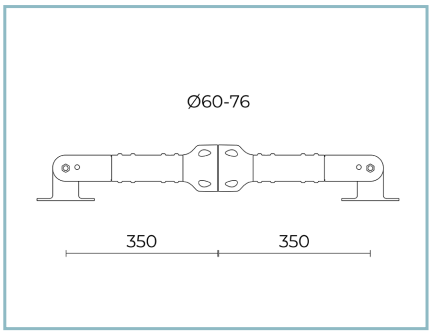

06KS910C0

B90 Double arm
for poles Ø 60-76 mm. L=350 mm.
Colour: Sablé 100 Noir.

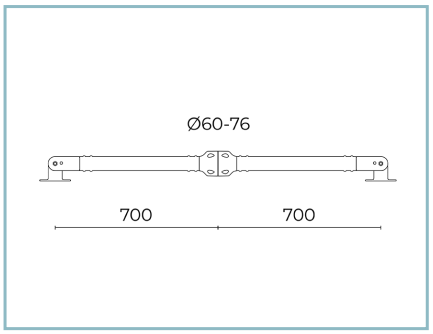

06KS911C0

B91 Double arm
for poles Ø 60-76 mm. L=700 mm.
Colour: Sablé 100 Noir.

NOTES
*Performance data
The values indicated in this data sheet are nominal values with a tolerance of +/-7%.
Source flux and source efficiency data refer to the LED module without optics; in case you are interested in the performance of the LED module complete with optical system, you must multiply the data reported by the factor 0.9.

General Data
The characteristics of the product listed may be subject to change and must be confirmed when ordering.
In order to promote constant updating of its products, Cariboni Group reserves the right to make changes without prior notice.