Product Sheet
Rev. 25/03/2022

Kosmos Pole Side
Size: medium
Colour Temperature: 4000 K
Type of optics: street asymmetrical ST-01

06KS2C45030CHM4
Colour: Sablé 100 Noir

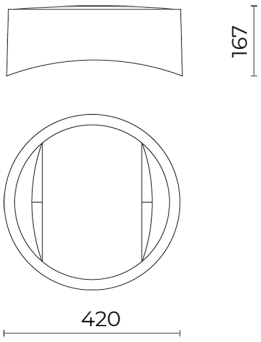

General Features

Description: LED luminaire
Insulation class: class II (class I on request)
Rated voltage: 220-240 V 50/60 Hz
Protection Grade: IP66
Impact protection: IK09
Surge protection device: integrated 10kV-10kA, Type 3, equipped with LED signaling and thermofusible for disconnection at the end of life; impulse withstand CL II 10kV DM
Power Factor: > 0.90
Ambient temperature Ta: -30°C +50°C
Weight: 7.50 kg
Max exposed surface: 0,140 m²
Lateral exposed surface: 0,063 m²
Common mode surge protection: 10 kV
Overvoltage protection differential mode: 10 kV
Driver: included
Marks and Certifications: ENEC / CE

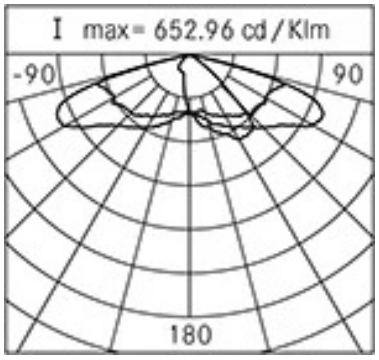

Performance Data*

LED Current:	525 mA
Source flow:	6645 lm
Source power:	35.5 W
Source efficiency:	187 lm/W
Fitting flux:	5715 lm
Fitting power:	39.5 W
Fitting efficiency:	145 lm/W
Glare Index Category:	D5

Cariboni group

Optical System
Source: LED R2
Colour Temperature: 4000 K
Color Rendering Index (CRI): ≥ 70
Chromatic consistency (SDCM): ≤ 4
Type of optics: street asymmetrical ST-01
Optical group life: >160.000h @700mA @Ta25°C TM21 L80B20 >160.000h @700mA @Ta25°C TM21 L80B10
Photobiological safety class: EXEMPT GROUP
ULOR: 0%
DLOR: 100%
Light intensity category: G*3
Normative References
EN60598-1 / EN60598-2-3 / EN62471 / EN61547

Installation and maintenance
Installation: post top / side pole / arm / wall
Pole diameter: Ø 60 - 76 - 102 mm
Tilt: continuous / stepped adjustment -10° +190° (step 5°)
Fastening: upwards installation on a pole arm (for poles Ø 60-76 mm or poles Ø 102 mm) with adjustable joint made of die-cast aluminium alloy UNI EN AB 47100 (copper content < 1%), polyester powder coated (Sablé 100 Noir); L-shaped joint made of die-cast aluminium alloy UNI EN AB 47100 (copper content < 1%), polyester powder coated (Sablé 100 Noir), pole Ø 76 mm, with post-top reduction Ø 60 mm H. Ø 90 mm.
Wiring: pre-wired product
Ø power cable: 10 ÷ 14 mm
Cable Gland: PG16
Replaceable wiring plate: removable plate
Replaceable optical unit: LED disc replacement
Power supply compartment: independent from the optical system

Flux regulation	Standard	On request
Virtual Midnight Teaching	X	
Constant flow output (CLO)	X	
Adjusting 1-10V		X
DALI control		X
Mains voltage variation	X	
Pilot line		X
Power line telemanagement (PLC)		X
Wireless remote management		X
Arrangement for motion / brightness sensors		X

Materials
Body: die-cast aluminium alloy UNI EN AB 47100 (copper content < 1%)
Screen: tempered flat glass
Lenses: high-transparency PMMA
Fitting system: die-cast aluminium alloy UNI EN AB 47100 (copper content < 1%)
Seals: expanded anti-age silicone foam
Screws: stainless steel AISI 304
Wiring plate: zinc-plated steel
Finish: phospho-chromatation treated and polyester powder-coated in 16 phases to increase weather resistance

Colours	
■ Sablé 100 Noir	Code: **06KS2C45030CHM4**

Complements

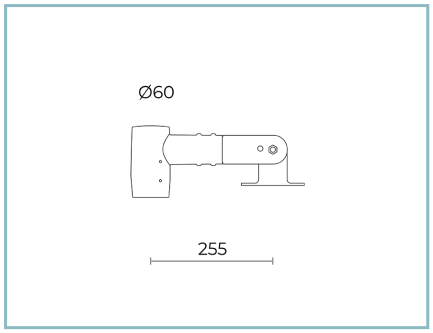

06KS906C0

B86 Joint for post top
Ø 60 mm. Colour: Sablé 100 Noir.

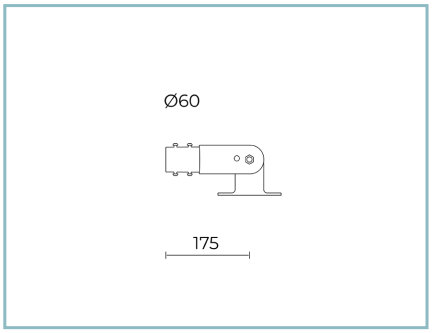

06KS904C0

B84 Joint for Ø 60 mm arms.
Colour: Sablé 100 Noir.

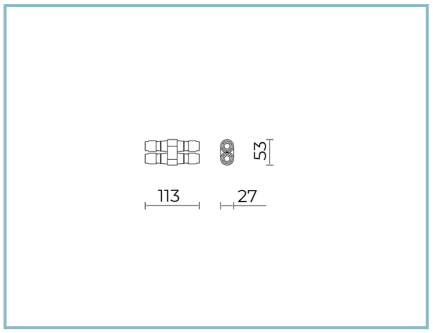

06KS909C0

B89 Connector 4 way IP68

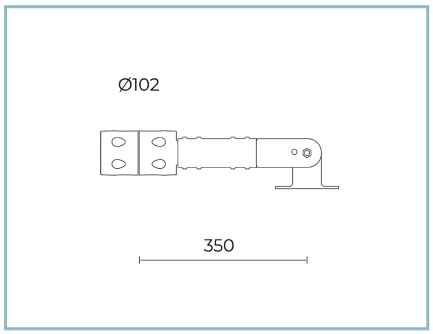

06KS912C0

B92 Single arm
for poles Ø 102 mm. L=350 mm. Colour: Sablé 100 Noir.

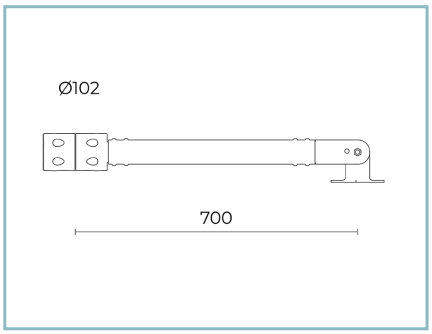

06KS913C0

B93 Single arm
for poles Ø 102 mm. L=700 mm.
Colour: Sablé 100 Noir.

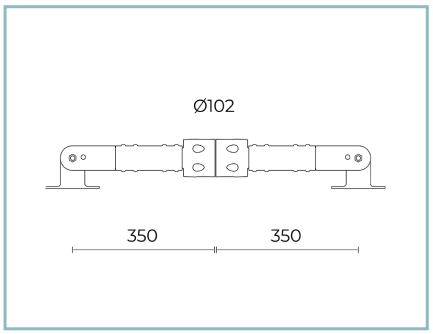

06KS914C0

B94 Double arm
for poles Ø 102 mm. L=350 mm. Colour: Sablé 100 Noir.

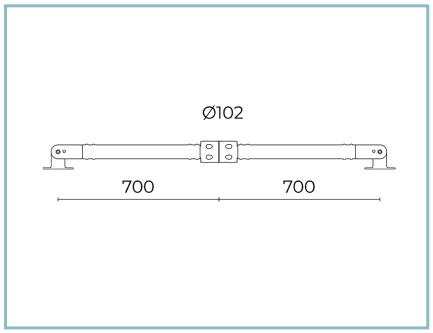

06KS915C0

B95 Double arm
for poles Ø 102 mm. L=700 mm.
Colour: Sablé 100 Noir.

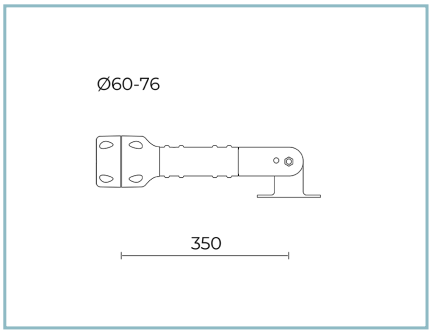

06KS907C0

B87 Single arm
for poles Ø 60-76 mm. L=350 mm.
Colour: Sablé 100 Noir.

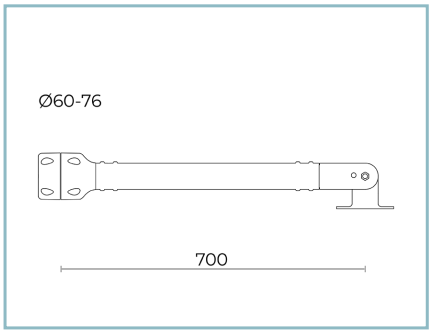

06KS908C0

B88 Single arm
for poles Ø 60-76 mm. L=700 mm.
Colour: Sablé 100 Noir.

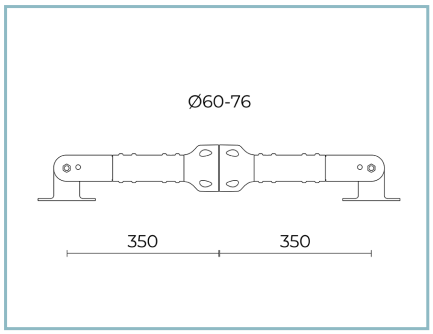

06KS910C0

B90 Double arm
for poles Ø 60-76 mm. L=350 mm.
Colour: Sablé 100 Noir.

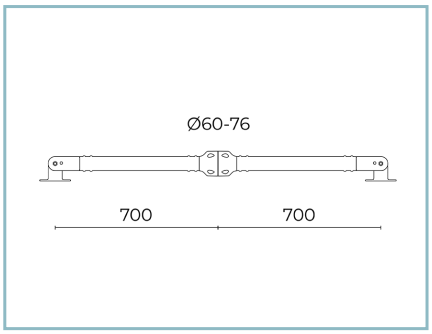

06KS911C0

B91 Double arm
for poles Ø 60-76 mm. L=700 mm.
Colour: Sablé 100 Noir.

NOTES
*Performance data
The values indicated in this data sheet are nominal values with a tolerance of +/-7%.
Source flux and source efficiency data refer to the LED module without optics; in case you are interested in the performance of the LED module complete with optical system, you must multiply the data reported by the factor 0.9.

General Data
The characteristics of the product listed may be subject to change and must be confirmed when ordering.
In order to promote constant updating of its products, Cariboni Group reserves the right to make changes without prior notice.