Product Sheet
Rev. 28/05/2024

Sigma Street
Size: medium
Color Temperature: 4000 K
Type of optics: PB-01 Low pole

06SG4C466016CHM4
Colour: Sablé 100 Noir

General Features

Description: LED luminaire
Insulation class: class II
Rated voltage: 220-240 V 50/60 Hz
Protection Grade: IP66
Impact protection: IK09
Surge protection device: integrated 10kV-10kA, Type 3, equipped with LED signaling and thermofusible for disconnection at the end of life; impulse withstand CL II 10kV DM
Power Factor: > 0.90
Ambient temperature Ta: -30°C +50°C
Weight: 8.00 kg
Max exposed surface: 0,13 m²
Lateral exposed surface: 0,075 m²
Common mode surge protection: 10 kV
Overvoltage protection differential mode: 10 kV
Driver: included
Driver lifetime: >100.000 h @ Ta 25°C (0,2% / 1000h)
Marks and Certifications: CE

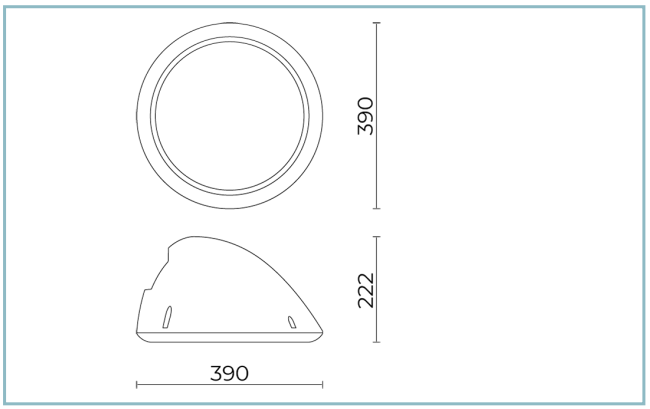

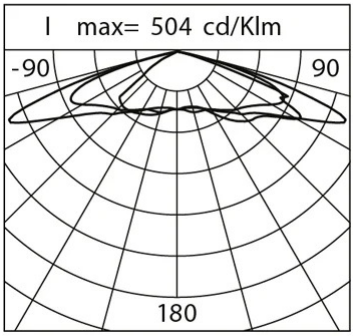

Performance Data*

Source flux:	11720 lm
Source power:	61 W
Source efficiency:	192 lm/W
Device flux:	10080 lm
Device power:	65 W
Appliance efficiency:	155 lm/W
Glare Index Category:	D4

Cariboni group

Optical System
Source: LED R2
Color Temperature: 4000 K
Color Rendering Index (CRI): ≥ 70
Chromatic consistency (SDCM): ≤ 3
Type of optics: PB-01 Low pole
Optical group life: >100.000 h @ Ta 25°C L90B10
Photobiological safety class: EXEMPT GROUP
ULOR: 0%
DLOR: 100%
Light intensity category: G*4
BUG rating: B2-U0-G2
Normative References
EN60598-1 / EN60598-2-3 / EN62471 / EN61547

Installation and maintenance
Installation: post top / side pole / wall
Pole diameter: Ø 60 - 76 - 102 mm
Tilt: (pole side, wall, ground) -90° +35°
Fixing: the product can be equipped with a fixing base for wall mounting, an adjustable joint for installation on arm and pole or with the new post top accessory.
Wiring: the product is supplied with an outgoing cable (L = 0,2m) and a 4-pin plug and socket connector for a quick and easy installation.
Ø power cable: 10 ÷ 14 mm
Cable Gland: PG16
Replaceable wiring plate: removable plate
Replaceable optical unit: each LED module is replaceable
Screen opening: opening by means of tools
Power supply compartment: independent from the optical group

Flow adjustment	On request
Virtual Midnight Teaching	X
Constant flow output (CLO)	X
Adjusting 1-10V	X
DALI control	X
Mains voltage variation	X
Power line telemanagement (PLC)	X
Wireless remote management	X
Provision for motion/light sensors	X

Materials
Body: die-cast aluminium alloy UNI EN AB 47100 (copper content < 1%)
Screen: tempered flat glass
Lenses: high-transparency PMMA
Fixing system: die-cast aluminium alloy UNI EN AB 47100 (copper content < 1%)
Seals: expanded anti-age silicone foam
Screws: stainless steel AISI 304
Wiring plate: zinc-plated steel
Finish: phospho-chromatation treated and polyester powder-coated in 16 phases to increase weather resistance

Colors	
■ Sablé 100 Noir	Code: **06SG4C466016CHM4**

Complements

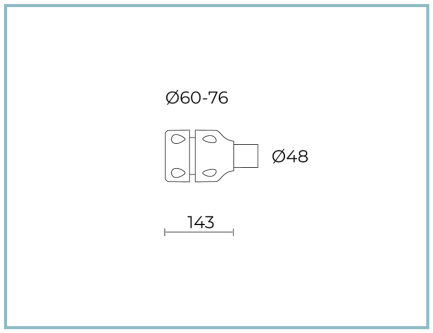

01AK903C0

L3 Single joint kit
for Ø 60-76 mm pole. Colour: Sablé 100 Noir.

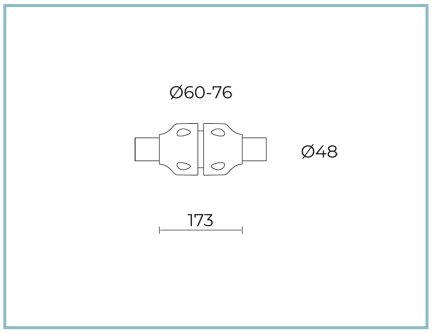

01AK904C0

L4 Double joint kit
for Ø 60-76 mm pole. Colour: Sablé 100 Noir.

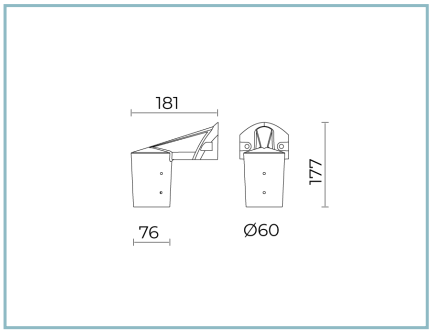

06SG905C0

B178 Kit post top
Ø 60 mm (H. 90 mm) for pole Ø 76mm. Colour: Sablé 100 Noir.

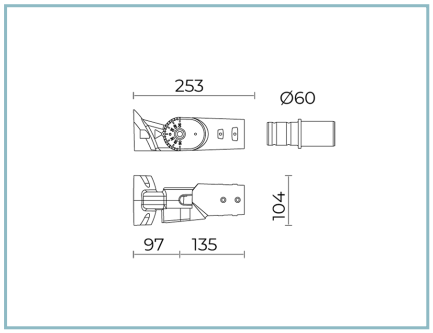

06SG907C0

B180 Kit pole side
Ø60-76mm SIGMA STREET MEDIUM. Colour: Sablè 100 Noir.

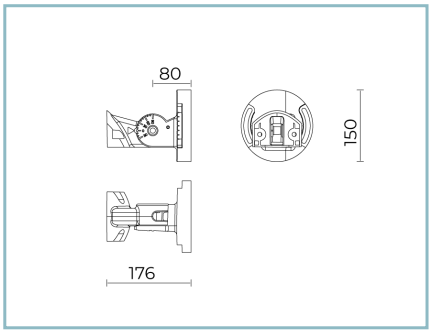

06SG909C0

B182 Adjustable joint
for wall or ground SIGMA STREET MEDIUM. Colour: Sablè 100 Noir.

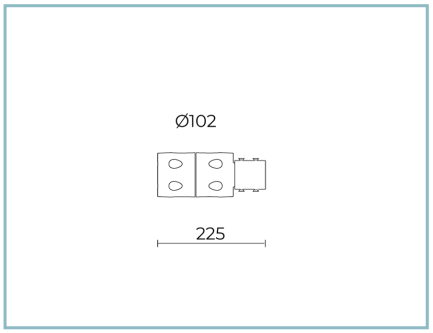

06AK916C0

B139 Single ring Ø102mm.
Colour: Sablé 100 Noir.

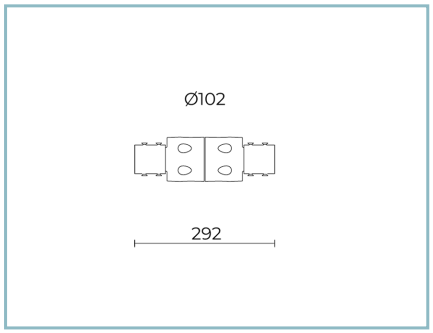

06AK917C0

B140 Double ring for pole Ø102mm.
Colour: Sablé 100 Noir.

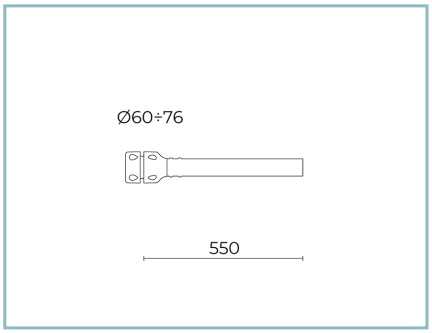

01AK921C0

B1 Single tubular arm
Ø 60 mm for poles Ø 60-76 mm. L=550 mm. Colour: Sablé 100 Noir.

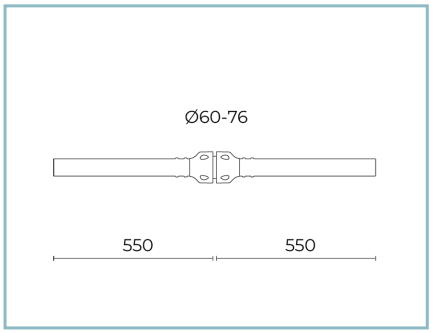

01AK922C0

B2 Double tubular arm
Ø 60 mm for poles Ø 60-76 mm. L=550 mm. Colour: Sablé 100 Noir.

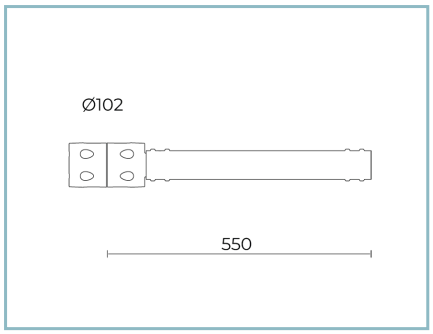

06AK907C0

B155 Single arm
for poles Ø 102 mm. L=550 mm. Colour: Sablé 100 Noir.

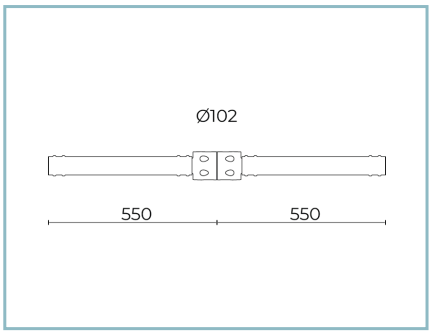

06AK909C0

B157 Double arm
for poles Ø 102 mm. L=550 mm. Colour: Sablé 100 Noir.

NOTES
*Performance data
The values indicated in this data sheet are nominal values with a tolerance of +/-7%.
Source flux and source efficiency data refer to the LED module without optics; in case you are interested in the performance of the LED module complete with optical system, you must multiply the data reported by the factor 0.9.

General Data
The characteristics of the product listed may be subject to change and must be confirmed when ordering.
In order to promote constant updating of its products, Cariboni Group reserves the right to make changes without prior notice.